LV-MaxSonar®-WR1™ High Performance Weather Resistant Sonar Range Finder

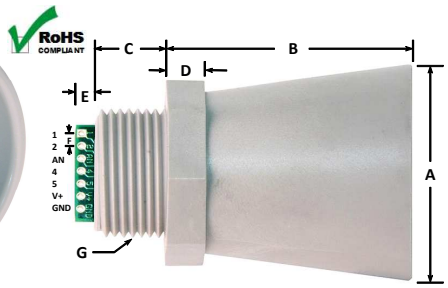

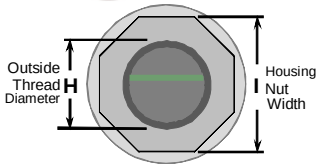

With 3V - 5.5V power the LV-MaxSonar®-WR1™ provides very short to long-range detection and ranging, in a compact, robust PVC housing, designed to meet IP67 water intrusion, and matches standard electrical ¾" PCV pipe fittings.

The LV-MaxSonar®-WR1™ detects objects from 0-inches to 254-inches (6.45-meters) and provides sonar range information from 12-inches out to 254-inches with 1-inch resolution. Objects from 0-inches to 12-inches range as 12-inches. The interface output formats included are pulse width output, analog voltage output, and serial digital output.

A	1.72" dia.	43.8 mm dia.
B	2.00"	50.7 mm
C	0.58"	14.4 mm
D	0.31"	7.9 mm
E	0.18"	4.6 mm
F	0.1"	2.54 mm
G	3/4" National Pipe Thread Straight	
H	1.032" dia.	26.2 mm dia.
I	1.37"	34.8 mm
weight, 1.76 oz., 50 grams		

values are nominal

Features

- Designed for outdoor or indoor environments
- Precise narrow beam
- High sensitivity
- Continuously variable gain
- Object detection includes zero range objects
- 3V to 5.5V supply with very low average current draw
- Readings can occur up to every 50mS, (20-Hz rate)
- Free run operation can continually measure and output range information
- Triggered operation provides the range reading as desired
- All interfaces are active simultaneously
  - Serial, 0 to Vcc
    - 9600Baud, 81N
  - Analog, (Vcc/512) / inch
  - Pulse width, (147uS/inch)
- Learns ringdown pattern when commanded to start ranging
- Sensor operates at 42KHz
- High output sine wave sensor drive

Benefits

- Very low cost IP67 sealed sonar ranger
- Reliable and stable range data
- Sensor dead zone virtually gone
- Lowest power IP67 ranger
- Quality narrow beam characteristics
- Easy hole mounting or mating with standard electrical fittings
- Very low power ranger, excellent for multiple sensor or battery based systems
- Can be triggered externally or internally
- Sensor reports the range reading directly, frees up user processor
- Fast measurement cycle
- User can choose any of the three sensor outputs

Beam Characteristics

People detection requires high sensitivity, yet minimal side-lobes requires low sensitivity. The LV-MaxSonar®-WR1™ balances the detection of people with minimal side-lobes.

Sample results for measured beam patterns are shown below on a 12-inch grid. The detection pattern is shown for;

(A) 0.25-inch diameter dowel,

(B) 1-inch diameter dowel, note the long narrow detection pattern,

(C) 3.25-inch diameter rod, note the long controlled detection pattern,

(D) 11-inch wide board moved left to right with the board parallel to the front sensor face and the sensor stationary. This shows the sensor's range capability.

Note: The displayed beam width of (D) is a function of the specular nature of sonar and the shape of the board (i.e. flat mirror like) and should never be confused with actual sensor beam width.

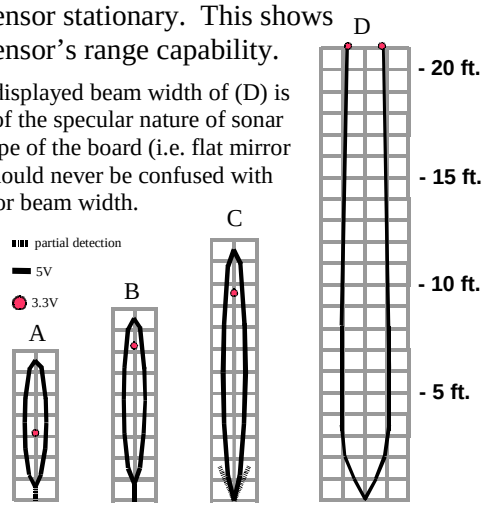

beam characteristics are approximate

LV-MaxSonar®-WR1™ Pin Out

Pin 1 - Leave open (or high) for serial output on the Pin 5 output. When pin one is held low the Pin 5 output sends a pulse (instead of serial data), suitable for low noise chaining.

Pin 2 - (PW) This pin outputs a pulse width representation of range. To calculate distance use the scale factor of 147uS per inch.

AN - Outputs analog voltage with a scaling factor of (Vcc/512) per inch. A supply of 5V yields ~9.8mV/in. and 3.3V yields ~6.4mV/in. The output is buffered and corresponds to the most recent range data.

Pin 4 - (RX) This pin is internally pulled high. The WR1™ will continually measure range and output if the pin is left unconnected or held high. If held low the WR1™ will stop ranging. Bring high 20uS or more for range reading.

Pin 5 - (TX) When Pin 1 is open or held high, the Pin 5 output delivers asynchronous serial with an RS232 format, except voltages are 0-Vcc. The output is an ASCII capital "R", followed by three ASCII character digits representing the range in inches up to a maximum of 255, followed by a carriage return (ASCII 13). The baud rate is 9600, 8 bits, no parity, with one stop bit. Although the voltage of 0-Vcc is outside the RS232 standard, most RS232 devices have sufficient margin to read 0-Vcc serial data. If standard voltage level RS232 is desired, invert, and connect an RS232 converter such as a MAX232.
When Pin 1 is held low the TX output sends a single pulse, suitable for low noise chaining (no serial data).

V+ Operates on 3V - 5.5V. Average (and peak) current draw for 3.3V & 5V operation is 2.1mA (50mA peak) & 3.4mA (100mA peak) respectively. Peak current is used during sonar pulse transmit.

GND Return for the DC power supply. GND (& V+) must be ripple and noise free for best operation.

LV-MaxSonar®-WR1™ Circuit

The LV-MaxSonar®-WR1™ sensor functions using active components consisting of an LM324 and PIC16F690, together with a variety of other components. The schematic is shown to provide the user with detailed connection information.

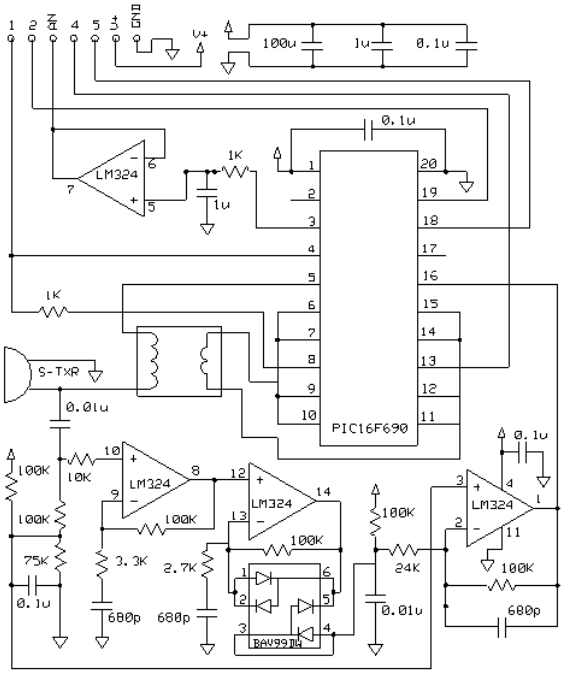

LV-MaxSonar®-WR1™ Timing Description

320mS after power-up, the LV-MaxSonar®-WR1™ is ready to accept the command to range. If Pin 4 is left open or held high, the sensor will first run a calibration cycle (49mS), and then it will take a range reading (49mS). Therefore, the first reading will take ~100mS. Subsequent readings will take 49mS. The LV-MaxSonar®-WR1™ checks Pin 4 at the end of every cycle. Range data can be acquired once every 49mS.

Each ranging cycle of a 49mS period starts by Pin 4 being high or open, after which the LV-MaxSonar®-WR1™ sends thirteen 42KHz waves, after which the pulse width Pin 2 is set high. When a target is detected, Pin 2 is pulled low. Pin 2 pin is high for up to 37.5mS if no target is detected. The remainder of the 49mS time (less 4.7mS) is spent adjusting the analog voltage to the correct level. When a long distance is measured immediately after a short distance reading, the analog voltage may not reach the exact level within one read cycle. During the last 4.7mS, the serial data is sent. The LV-MaxSonar®-WR1™ timing is factory calibrated, and in use is better than two percent.

LV-MaxSonar®-WR1™ General Power-Up Instruction

Each time after the LV-MaxSonar®-WR1™ is powered up, it will calibrate during its first read cycle. The sensor uses this stored information to range a close object. It is important that objects not be close to the sensor during this calibration cycle. The best sensitivity is obtained when it is clear for eighteen inches, but good results are common when clear for at least twelve inches. If an object is too close during the calibration cycle, the sensor may then ignore objects at that distance.

The LV-MaxSonar®-WR1™ does not use the calibration data to temperature compensate for range, but instead to compensate for the sensor ringdown pattern. If the temperature, humidity, or applied voltage changes during operation, the sensor may require recalibration to reacquire the ringdown pattern. Unless recalibrated, if the temperature increases, the sensor is more likely to have false close readings. If the temperature decreases, the sensor is more likely to have reduced up close sensitivity. To recalibrate the LV-MaxSonar®-WR1™, cycle power, then command a read cycle.

MaxBotix, MaxSonar & EZ1 are trademarks of MaxBotix Inc.

Email: info@maxbotix.com Web:www.maxbotix.com